REVISIONS				
REV.	DESCRIPTION	ECN	DATE	APPROVED
E	REFER TO ECN	12864	9/9/14	JJ

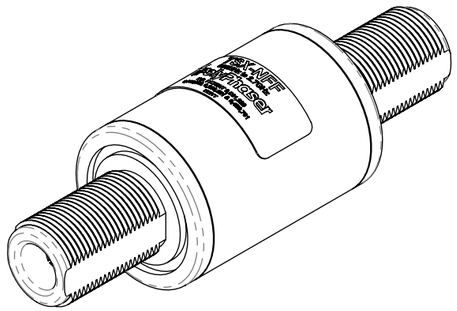

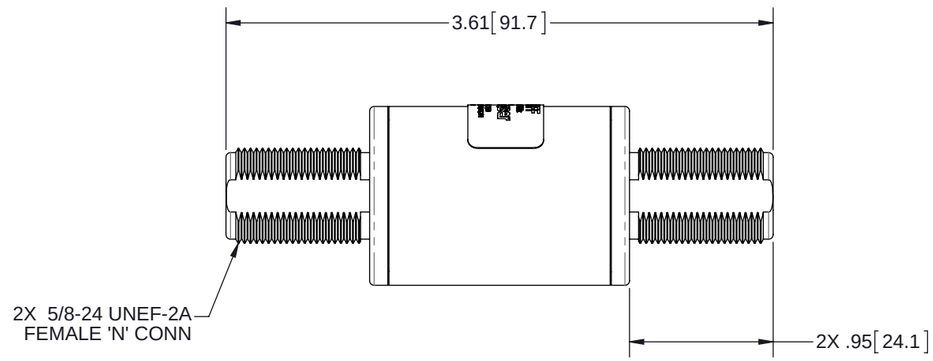

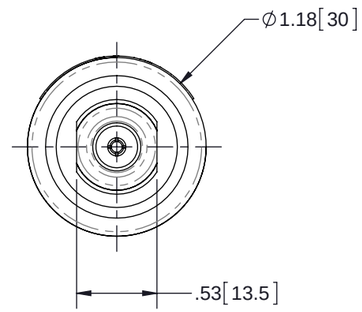

MAXIMUM CHARACTERISTICS

APPLICATION:
DC SHORT/RF ONLY (NO POWER SUPPLY PROVISIONS)
BULKHEAD MOUNT BI-DIRECTIONAL
WEATHERPROOF WHEN INSTALLED
FREQUENCY RANGE:
698MHz TO 2.7GHz @ -26dB RETURN LOSS
MAX SURGE:
IEC 61000-4-5 8/20Õs WAVEFORM
40kA MAX
20kA MULTIPLE
INSERTION LOSS:
Ò0.1dB
CONTINUOUS POWER:
500W @ 920MHz
(750W @ 50ÁC)
LET THROUGH VOLTAGE:
ÒÑ200mV FOR 3kA @ 8/20Õs WAVEFORM
THROUGHPUT ENERGY:
Ò5nJ FOR 3kA @ 8/20Õs WAVEFORM
TEMPERATURE:
-50ÁC TO +85ÁC STORAGE/OPERATING
VIBRATION:
1G @ 5Hz TO 100Hz
MATERIAL:
BODY: TRI-PLATED BRASS
PTFE: DIELECTRIC
CENTER PINS: TRI-M
ENVIRONMENTAL:
MEETS IEC 60529 IP67 WHEN CONNECTED
MEETS BELLCORE #TA-NWT-000487
PROCEDURE 4.11, 120MPH WIND DRIVEN
RAIN INTRUSION TEST
CE COMPLIANT
RoHS COMPLIANT

HARDWARE KIT INCLUDES:

QTY	DESCRIPTION
1	NUT 5/8-24 303 HEX SS
1	WASHER 5/8 410 SS
1	SILICONE O-RING 019

CUSTOMER APPROVAL: _____ DATE: _____

ALL DIMENSIONS SHOWN ARE FOR REFERENCE ONLY.

THESE COMMODITIES, TECHNOLOGY OR SOFTWARE WERE EXPORTED FROM THE UNITED STATES IN ACCORDANCE WITH THE EXPORT ADMINISTRATION REGULATIONS. DIVERSION CONTRARY TO U.S. LAW PROHIBITED.

UNLESS OTHERWISE SPECIFIED
LEADING DIMENSIONS ARE INCHES
DIMENSIONS IN [ ] ARE MILLIMETERS

TOLERANCES:
FRACTIONS=Ñ 1/32 .XX=Ñ .03
ANGLES=Ñ 1 Á .XXX=Ñ .010

MATERIAL

THIRD-ANGLE PROJECTION

DRAWN	RD	02/09/2012
ENG APPD	JJ	5/15/12
PRODUCT MGR	CP	5/15/12
MARKETING APPD	LJ	5/15/12
PROJECT NO.		

NOTICE: THE INFORMATION AND DESIGN IN THIS DOCUMENT IS THE PROPERTY OF TRANSTECTOR SYSTEMS. ALL RIGHTS RESERVED.

PolyPhaser

TITLE
BI-DIRECTIONAL BROADBAND DC SHORT FILTER 'N'
CUSTOMER SPECIFICATION

SIZE	CAGE	PART NUMBER	REV
B	30992	TSX-NFF	E

SCALE	PROD CAT	DOCUMENT NAME	SHEET	OF
1:1	RFP	TSX-NFF-C	3	3

É 2014 Smiths Power. All rights reserved.

RSPSupply - 1-888-532-2706 - www.RSPSupply.com
http://www.RSPSupply.com/p-11376-Polyphaser-TSX-NFF-Coax-Lightning-Protector-698-MHz-2.7-GHz.aspx